COSPOLICH

MODEL NUMBERS:
DC20-2M-SNGD-MLR

DC20-2M-SNGD-MLR

REFRIGERARATED DISPLAY CASE

REFRIGERATED DISPLAY CASE

REFRIGERATED DISPLAY CASE

From conception to production, the Refrigerated Display Case was designed to be versatile and improve efficiency. The unit is a rotating refrigerated display case that features a robust design that will withstand rugged use.

APPLICATION

The superior design of our products encompass quality, user comfort, as well as aesthetics. It is our interest that our Refrigerated Display Case does not only look pleasing, but additionally provides function and service while complimenting the adjoining equipment in the service area.

CONSTRUCTION

To compliment our design, we incorporate quality materials assembled by true craftsmen. Our use of heavy gauge type 304 stainless steel throughout inhibits corrosion and provides the best in sanitary conditions.

FEATURES

- Insulted, Tempered Glass Door and Panels
- Storage of Refrigerated Food Items
- 404A Refrigerant
- Rotating Shelves
- Interior Fluroscent Lighting

EQUIPMENT SPECIFICATIONS

DIMENSIONAL DATA	DC20-2M-SNGD-MLR
Width Over all (in / mm)	38 in / 965.2 mm
Depth Overall (in / mm)	32 in / 812.8 mm
Height Overall (in / mm)	75 in / 1905 mm
Weight (lbs / kg)	562 lbs / 254.91 kg
ELECTRICAL DATA	
Voltage	115v
Total Amperes (per well)	RLA: 6.7 amps Max Fuse: 15
SHIPPING DATA	
Width-Crated (in / mm)	44 in / 1117.6 mm
Depth-Crated (in / mm)	41 in / 1041.4 mm
Height-Crated (in / mm)	83.5 in / 2120.9 mm
Weight-Crated (lbs / kg)	762 lbs / 345.64 kg

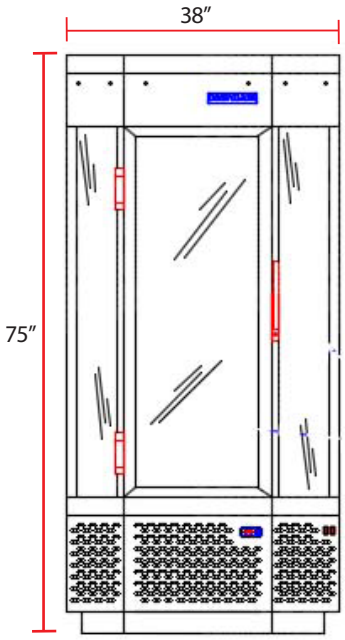

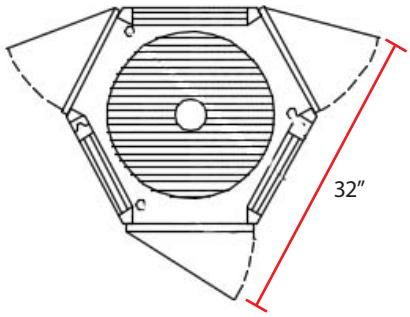

CONTACT FACTORY FOR YOUR SPECIFIC CAPACITY REQUIREMENTS

Quality & Innovation Since 1937